Drawing

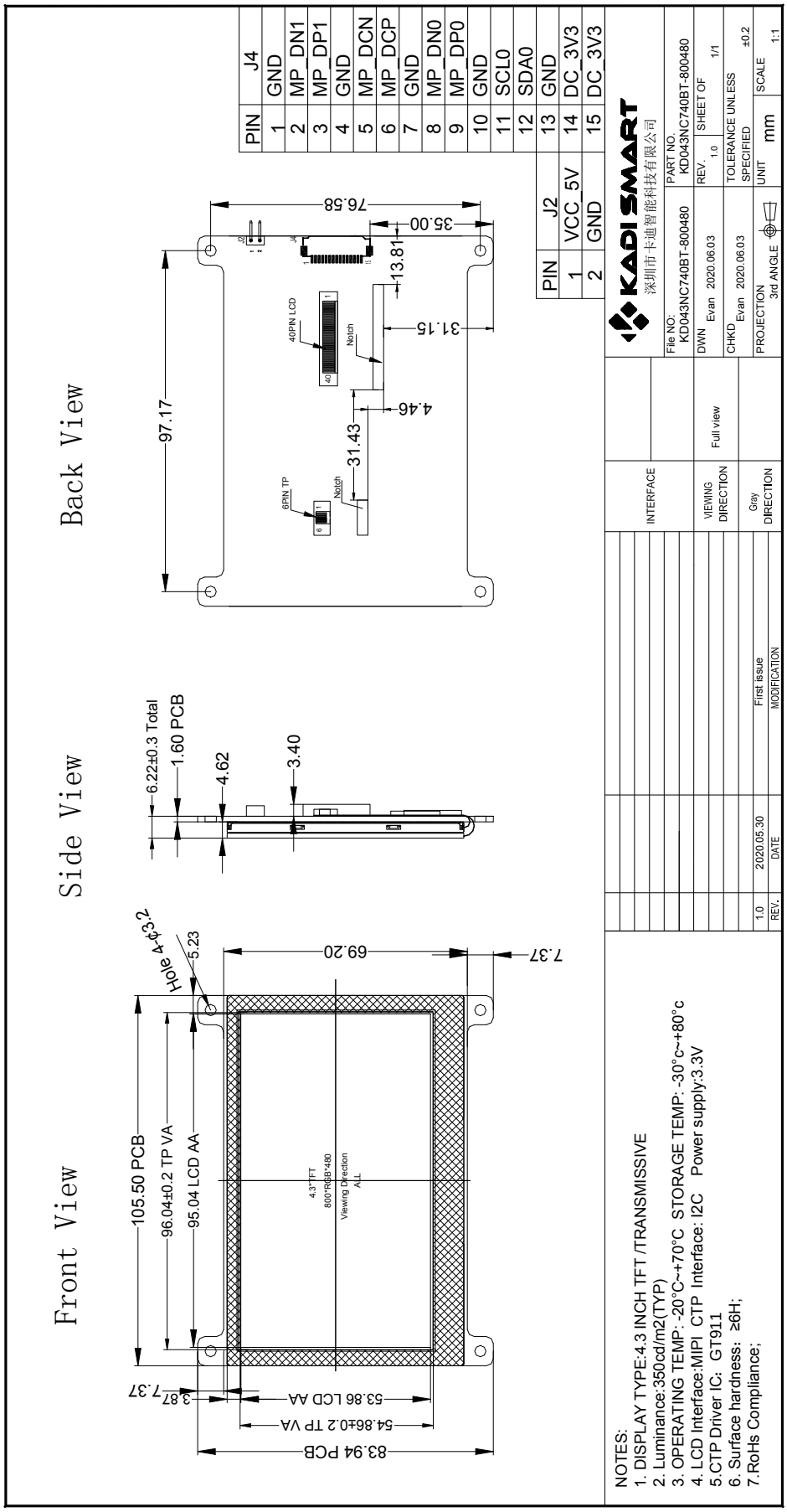

Front View
Side View
Back View
105.50 PCB
96.04±0.2 TP VA
95.04 LCD AA
Hole 4-φ3.2
5.23
69.20
7.37
4.3"TFT
800*RGB*480
Viewing Direction
ALL
3.87
53.86 LCD AA
54.86±0.2 TP VA
83.94 PCB
6.22±0.3 Total
1.60 PCB
4.62
3.40
97.17
76.58
35.00
13.81
31.15
4.46
31.43
40PIN LCD
6PIN TP
Notch
PIN J2
1 VCC_5V
2 GND
PIN J4
1 GND
2 MP_DN1
3 MP_DP1
4 GND
5 MP_DCN
6 MP_DCP
7 GND
8 MP_DN0
9 MP_DP0
10 GND
11 SCL0
12 SDA0
13 GND
14 DC_3V3
15 DC_3V3
NOTES:
1. DISPLAY TYPE:4.3 INCH TFT /TRANSMISSIVE
2. Luminance:350cd/m2(TYP)
3. OPERATING TEMP: -20°C~+70°C STORAGE TEMP: -30°c~+80°c
4. LCD Interface:MIPI CTP Interface: I2C Power supply:3.3V
5.CTP Driver IC: GT911
6. Surface hardness: ≥6H;
7.RoHs Compliance;
INTERFACE
VIEWING DIRECTION
Full view
Gray DIRECTION
1.0 2020.05.30 First issue
REV. DATE MODIFICATION
KADI SMART
深圳市卡迪智能科技有限公司
File NO: KD043NC740BT-800480
PART NO. KD043NC740BT-800480
DWN Evan 2020.06.03
REV. 1.0
SHEET OF 1/1
CHKD Evan 2020.06.03
TOLERANCE UNLESS SPECIFIED ±0.2
PROJECTION 3rd ANGLE
UNIT mm
SCALE 1:1